J. exp. Biol. **146**, 255–275 (1989)

CODING AND PROCESSING OF ELECTROSENSORY INFORMATION IN GYMNOTIFORM FISH

BY WALTER HEILIGENBERG

Scripps Institution of Oceanography, Neurobiology Unit, University of California at San Diego, La Jolla, CA 92093, USA

Summary

Studies of the electrosensory system of gymnotiform fish have revealed principles of neuronal coding and processing of information which also characterize more advanced systems, such as vision and audition in higher vertebrates.

1. Animals may have different classes of receptors adapted to code different variables within a given modality, and the separation of their central projections provides the basis for independent initial processing of these variables by higher-order neurones.

2. These separate pathways, however, eventually converge at the level of still higher-order neurones which are adapted to 'recognize' particular spatial and temporal constellations, or patterns, of the stimulus variables conveyed by these pathways.

3. As different stimulus patterns may control different forms of behavioural responses, corresponding neuronal structures can be identified which are adapted to recognize specific patterns. Neurones at an early level of pattern discrimination may still show very general response properties, whereas neurones closer to the ultimate control of a given behaviour show more specific response properties. These latter are less sensitive to stimulus features which are irrelevant to the control of the behaviour, and they code relevant features more purely and with higher acuity than do lower-level neurones.

4. The acuity of stimulus discrimination displayed by some high-order neurones may rival that observed at the behavioural level. This high sensitivity is achieved through pooling and integration of information supplied by large populations of less-sensitive receptors and lower-order neurones.

Introduction

Animals are naturally adapted to detect and to process very specific stimulus patterns in their environment, and studies of their ecology and ethology help us to identify such stimulus patterns as well as natural behavioural responses which they evoke and control. These responses, in turn, provide crucial assays for the experimental dissection of stimulus patterns and for the identification of their relevant components. Moreover, experimental manipulation of these components and their configuration within patterns enable us to pin down the computational

Key words: electrosensation, neuroethology, neuronal computations, neural networks, recognition units.

rules which underlie the evaluation of patterns by the animal's brain. In the course of this analysis, we will then gain confidence in our conceptual models of perception to the extent that we are able to predict behavioural consequences that are due to specific alterations in stimulus patterns.

After behavioural experiments have identified computational rules of perception, their specific neuronal implementations can be determined by physiological and anatomical approaches. In view of the overwhelming structural and functional complexities of brain mechanisms one would prefer to study neuronal mechanisms in the relatively simple systems found in invertebrates and lower vertebrates, such as fish and amphibians. The small size of their brains as well as the more modest number of structural components and interconnections facilitate such an analysis at the single-cell level.

The electrosensory system of certain orders of fish appears to have a relatively simple structural and functional organization, but it also displays sophisticated features, such as complex receptive fields, ordered central representations and modulations of sensory processing by recurrent descending pathways, which are known in more 'advanced' systems, such as mammalian vision and hearing. The basic neuronal principles of sensory information processing appear to be the same across different modalities and classes of organisms. The greater 'transparency' of simple systems, however, makes the study of these principles more feasible, and their successful exploration in simpler systems should ultimately enhance our understanding of more complex systems.

What makes the electrosensory system particularly appealing are behavioural responses, such as the jamming avoidance response (JAR), which remain intact in physiological preparations. Studies at the single-cell level can thus be combined with simultaneous behavioural assays to test the significance of stimulus patterns at both levels as well as to monitor the overall intactness of the system.

The following review summarizes our knowledge of coding and central processing in the electrosensory system of gymnotiform fish and points out commonalities with other systems, particularly the auditory system of the barn owl (Konishi *et al.* 1988). Various aspects of the anatomy and physiology of the electrosensory system have recently been presented in great detail (Bullock & Heiligenberg, 1986; Bastian, 1986*a*; Carr & Maler, 1986; Heiligenberg, 1986) so that references can largely be limited to more recent work. Issues of information processing have been addressed separately in later publications (Heiligenberg, 1987, 1988). This presentation will start with a description of stimulus coding at the periphery and then focus on central mechanisms of information processing, with particular emphasis on the jamming avoidance response (JAR) of *Eigenmannia*. The summary diagram in Fig. 1 shows the flow of information controlling this behaviour and may serve as a reference throughout this presentation.

Coding at the periphery

Electric fish assess objects in their environment by monitoring distortions of the

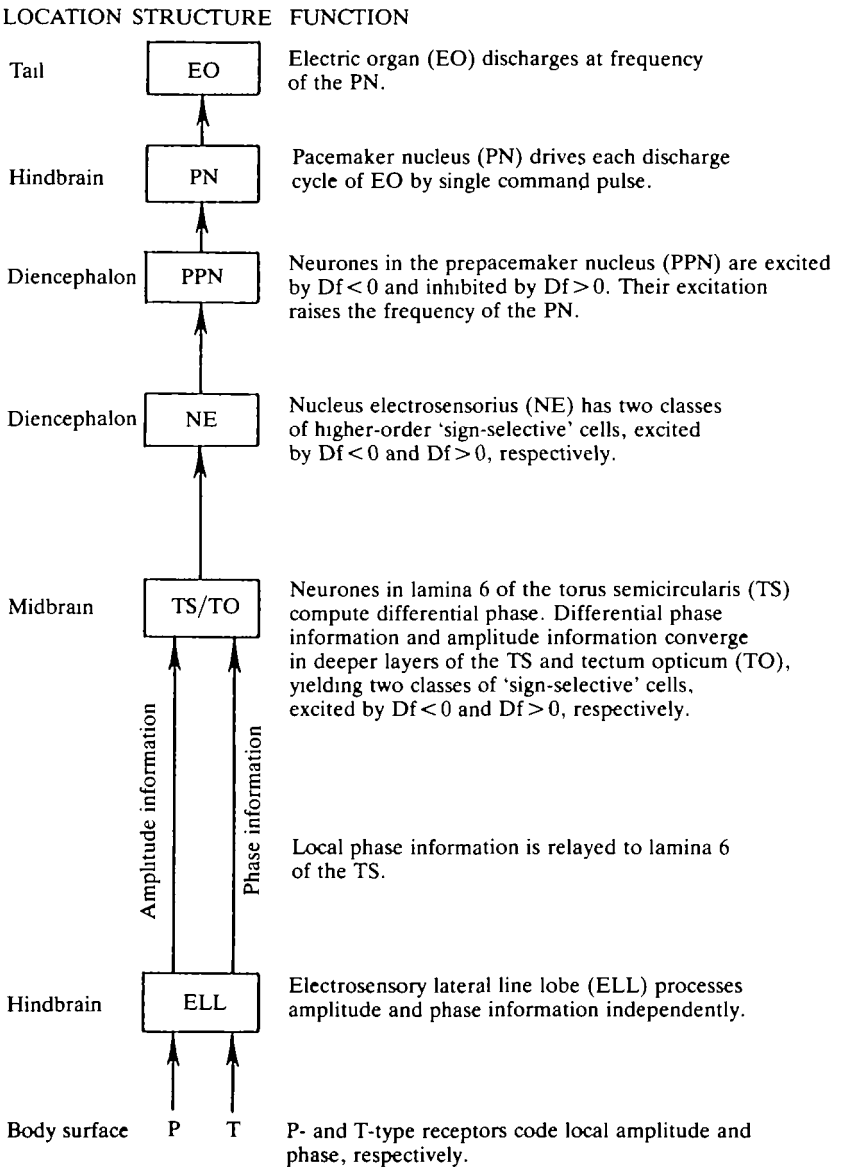

Fig. 1. The flow of information controlling the jamming avoidance response (JAR) in *Eigenmannia*. The fish generates a continuous, nearly sinusoidal electric organ discharge (EOD) with a fundamental frequency of a few hundred hertz. The electric signal caused by the interference of a neighbour's EODs with the animal's own EODs is modulated in its instantaneous amplitude and phase at the difference frequency, Df, of the two EODs. The animal minimizes the effect of jamming by a frequency too close to its own by lowering its frequency in response to small positive Dfs (i.e. if the neighbour's EOD frequency is slightly higher than its own) and by raising its frequency in response to small negative Dfs. The necessary information about the sign of Df is contained in the pattern of amplitude and phase modulations distributed over the animal's body surface (see details in Heiligenberg, 1986, 1988).

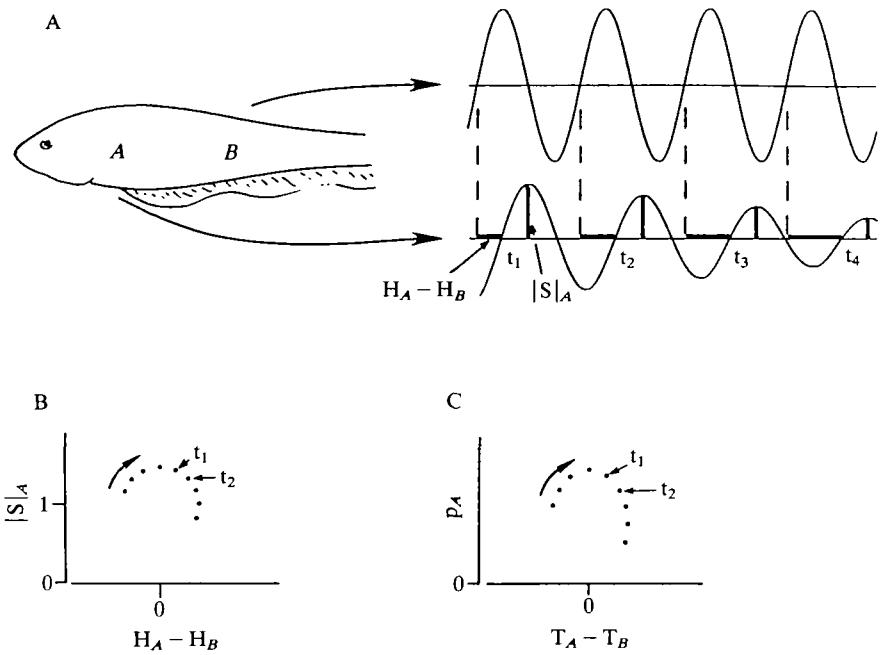

Fig. 2. Objects which differ electrically from the surrounding water distort the animal's electric organ discharge (EOD) signal. (A) The nearly sinusoidal EOD of a fish is recorded at two points, *A* and *B*, on its body surface. A small perturbation at *A* could affect the local EOD amplitude, $|S|_A$, as well as the EOD phase, or the timing of the zerocrossing, $H_A - H_B$, with reference to that of an unperturbed EOD at point *B*. Sampling of amplitude and phase values at successive EOD cycles, t_1, t_2, ..., yields a string of paired values which can be plotted in a two-dimensional amplitude–phase plane to form a graph (B). This graph is coded by the activity of two classes of 'tuberous' electroreceptors (C), P-type receptors which fire intermittently, and T-type receptors which fire one spike on each EOD cycle, phase-locked to the zerocrossing of the signal. The probability, p_A, of firing of P-type receptors at *A* codes the local amplitude, $|S|_A$, whereas the difference, $T_A - T_B$, in the timing of action potentials of T-type receptors at *A* and *B* codes the differential phase, $H_A - H_B$. The EOD distortions have been exaggerated for demonstration purposes. Realistic values are shown in Figs 3 and 4.

electric field generated by their own electric organ discharges (EODs). Electrical measurements in gymnotiform fish with continuous, nearly sinusoidal EODs show that the amplitude as well as the phase (i.e. the timing of zerocrossings) of the signal perceived by the animal are affected by the ohmic and capacitive loads of a nearby object (Rose & Heiligenberg, 1986*a*). The spatial pattern of alterations of amplitude and phase, monitored by large arrays of electroreceptors on the body surface, represents the electric image of the object (Figs 2, 3).

Amplitude and phase of the signal at the animal's body surface are also modulated when EODs of a neighbour interfere with the animal's own EODs. A simultaneous evaluation of amplitude and phase modulations by the central

nervous system enables the animal to determine the sign of the frequency difference between the two interfering EODs and to shift its own EOD frequency away from that of its neighbour. In this way, the animal avoids jamming of electrosensory inputs by frequencies too close to its own (Fig. 4). This jamming avoidance response (JAR) has become a powerful tool for analysing central mechanisms for the processing of amplitude and phase information.

Amplitude and phase are coded by separate types of 'tuberous' electroreceptors distributed over the body surface. P-type receptors fire intermittently and modulate their rate of firing in accordance with modulations in the local amplitude of the signal. T-type receptors fire one spike in each EOD cycle, at a fixed phase in reference to the zerocrossing of the signal. Separate primary afferents relay responses of P- and T-type receptors to different targets in the electrosensory lateral line lobe (ELL) which contains three somatotopically organized representations of the animal's body surface. Each representation receives the same primary afferent information *via* axon collaterals, and each has distinct strata of neurones for separate processing of amplitude and phase information.

In addition to tuberous electroreceptors, which are tuned to the fundamental frequency of the animal's own EODs, electric fish also have 'ampullary' electroreceptors which are sensitive to low-frequency signals. Such signals originate from various animate and inanimate sources which the fish passes in its environment (Kalmijn, 1987). Ampullary receptors project to a separate, single map of the body surface in the ELL.

Gymnotiform fish with wave-type EODs thus have separate classes of electroreceptors coding different aspects of the electrical environment. This separation of channels is maintained at the first-order processing station, the ELL of the hindbrain. A similar separation is seen in gymnotiform fish with pulse-type discharges, although the organization and functional significance of their amplitude- and phase-coding systems have not yet been explored in detail.

Two classes of electroreceptors, sensitive to different frequency ranges, are also found in the African mormyriform fish which evolved an electrosensory system independently from the gymnotiforms. 'Small pores', or ampullary receptors, respond to low-frequency signals, and two types of tuberous electroreceptors are tuned to the higher frequency range of the animal's EODs. In contrast to the situation in gymnotiforms, however, these two types of tuberous receptors cannot be considered as phase and amplitude coders. Instead, one type, called Knollenorgans, is adapted to code EODs of neighbours (Hopkins, 1986), whereas the second type, called Mormyromasts, is adapted to code alterations of the animal's own EOD field. These two types project to different central targets, and their information is gated differently by a corollary signal of the electric organ pacemaker (see Bell, 1989).

Further filtering of information provided by primary afferents

Although different types of electroreceptors are adapted to code specific types or aspects of electric signals, their higher-order 'representations' in the central

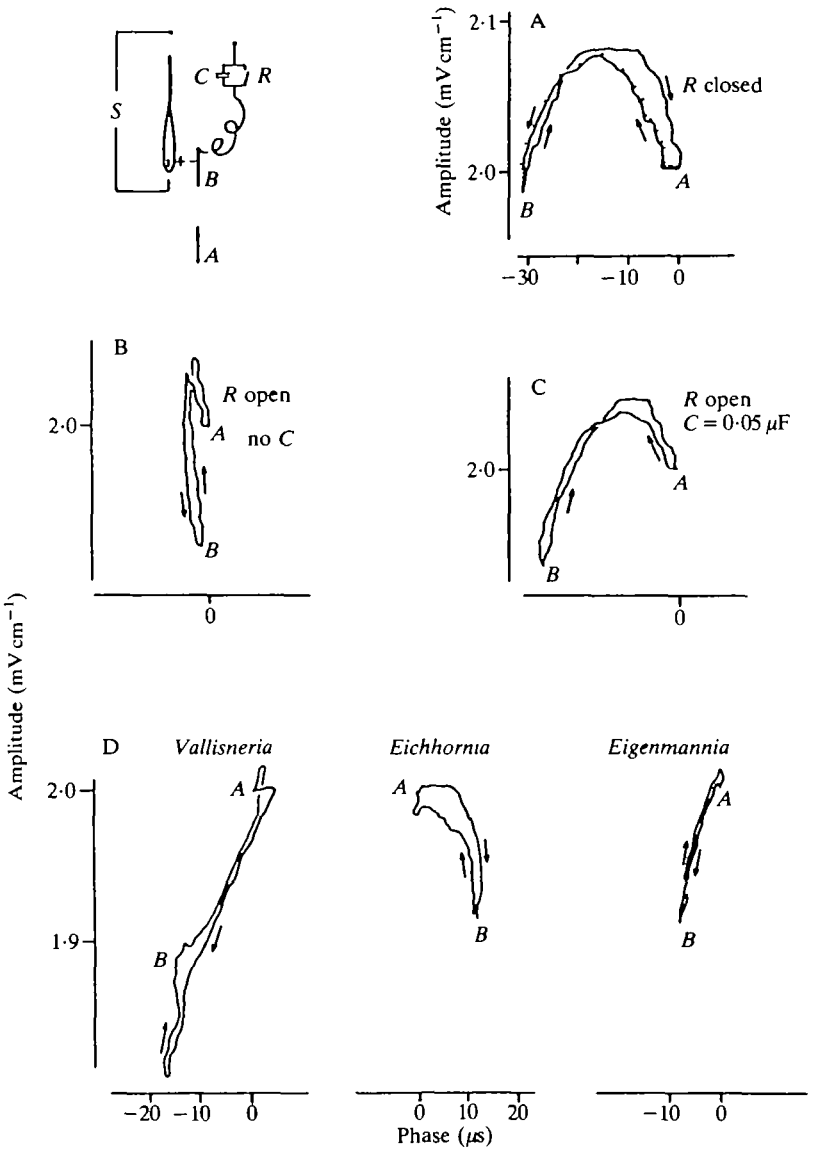

Fig. 3

nervous system appear to be even more selective in their response properties. The P- and T-type receptors of gymnotiform fish, for example, project to different classes of first-order neurones in the electrosensory lateral line lobe (ELL) of the hindbrain (Maler *et al.* 1981; Mathieson *et al.* 1987). P-receptors, whose firing rate is modulated in accordance with variations of signal amplitude, contact 'basilar' pyramidal cells (or E-units) directly, and 'non-basilar' pyramidal cells (or I-units) indirectly *via* inhibitory interneurones. As a consequence of these connections and additional network properties, such as descending recurrent inputs (Bastian, 1986*a*,*b*; Bastian & Bratton, 1988), E-units are excited by a rise in signal

Fig. 3. Modulations in EOD amplitude and phase depend upon the electrical qualities of the object. The inset in the upper left is a top view of a fish temporarily immobilized by injection of a curare-like drug. Since this drug also silences the animal's EOD, a substitute signal, *S*, of similar frequency (500 Hz), amplitude and field geometry has been provided by a signal generator and electrodes placed inside the mouth and at the tip of the tail. The EOD-like signal is recorded by a pair of differential electrodes (+ −) at the side of the animal's head. An object is moved sinusoidally at a rate of 0·5 Hz back and forth between the locations *A* and *B*, approximately 1 cm away from and parallel to the animal's body surface. In A–D the local peak-to-peak amplitude of *S* is plotted on the ordinate, and its phase (i.e. its zerocrossing), measured in microseconds and in reference to the cycle of the generator, is plotted on the abscissa. Since the frequency of *S* is 500 Hz, a full cycle (i.e. a phase value of 2π) measures 2 ms. A signal amplitude of 2 mV cm^{-1} and a phase defined as zero are recorded with the object in position *B*, which is distant from the animal. In A–C, the object is a thin, 1·5 cm wide, vertically suspended strip of metal foil, insulated on the side facing away from the animal. This foil is connected *via* a capacitor, *C*, or an electrical short-circuit (*R* closed) to a distant point in the water. In A dots mark every tenth cycle of the EOD-like signal, *S*, as the object travels from *A* to *B*. Arrows indicate the direction of motion in the amplitude–phase plane. Although the physical motion from *A* to *B* is, theoretically, symmetrical to the motion from *B* to *A*, slight turbulence-related asymmetries in the motion cause differences in the respective sections of the graph. Different natural objects were chosen in D, a leaf of the water plant *Vallisneria*, approximately 1·5 cm wide; a bulbous leaf stem of the water hyacinth, *Eichhornia*, approximately 2 cm in diameter; and a conspecific fish, with its EOD silenced by MS 222 anaesthesia. (From Rose & Heiligenberg, 1986*a*.)

amplitude, whereas I-units are excited by a fall in signal amplitude. Both cell types thus respond to changes (i.e. the temporal derivative) of signal amplitude and, in this regard, resemble 'on' and 'off' elements known in visual systems. Their somatotopic organization within the ELL ensures that the animal can monitor the spatial order of changes in signal amplitude over its entire body surface.

Although P-type receptor afferents fire action potentials within a preferred phase range of the nearly sinusoidal wave form of the EOD and thus, at least statistically, convey information about the phase of the signal, their representatives in the ELL fire with almost constant probability at any phase of the EOD. This is particularly the case for the I-units which, owing to the intervening inhibitory interneurones, are synaptically even further removed from the receptors. The E- and I-units in the ELL thus discard the small amount of phase information that is left in the firing of their primary afferents and are totally devoted to the coding of amplitude information.

T-receptor afferents code phase with some jitter as the timing of their action potentials with reference to the EOD cycle shows a standard deviation of the order of 30 μs. Several T-receptor afferents from a given location on the body surface, however, converge upon a single spherical cell in the ELL (Fig. 5). As a consequence of their electrotonic synapses and the electrical properties of the spherical cell and its spike initiation zone, the action potentials relayed by the spherical cell phase-lock to the EOD cycle with less jitter than do individual

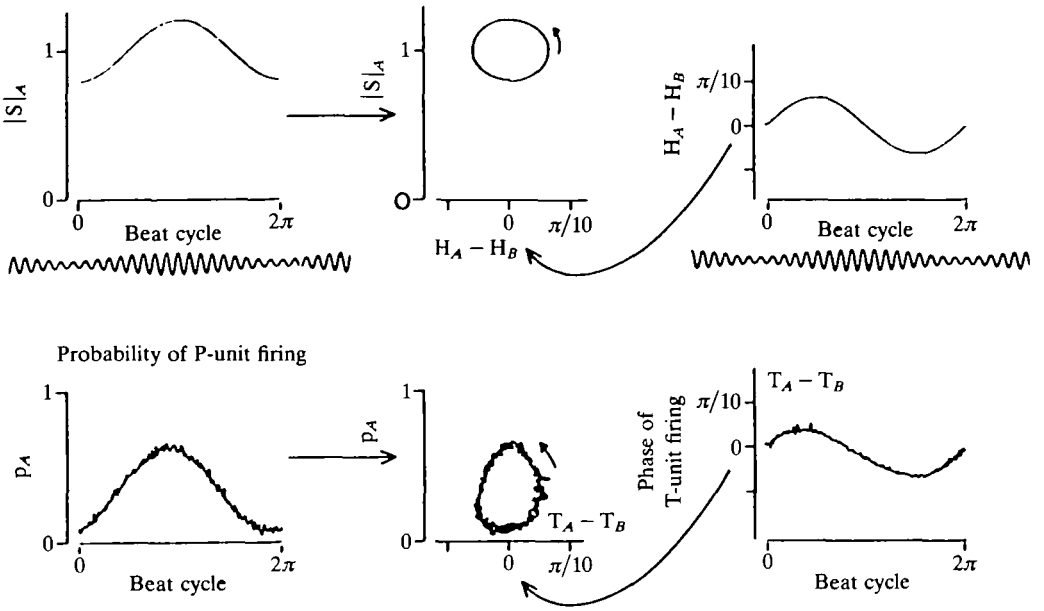

Fig. 4. Modulations in EOD amplitude and phase are also induced by the interfering EODs of a neighbour, and the temporal and spatial patterns of these modulations reflect the sign of the difference between the interfering frequencies. Following the notation introduced in Fig. 2, the diagrams in the top row show the modulation in amplitude, $|S|_A$ (left) and phase, $H_A - H_B$, (right), at a point A on the body surface which experiences a mixture of the animal's own signal and that of its neighbour. The phase reference point, B, is assumed not to be exposed to the neighbour's signal, and the amplitude at point A measured in the absence of the neighbour's signal is defined as 1. Amplitude and phase modulations are recorded over one full beat cycle, indicated schematically underneath the abscissae. (Note that with the animal's EOD frequency being 500 Hz and that of its neighbour being 501 Hz, the beat frequency would be 1 Hz, i.e. the beat cycle would be 1 s long and would cover 500 EOD cycles.) A joint plot of the amplitude and phase modulations in the amplitude–phase plane yields a circle, and the sense of rotation of this circle reflects the sign of the frequency difference: the counterclockwise sense indicated implies that the neighbour has a higher frequency. The lower row of diagrams shows the neuronal representation of the events in the top row. Amplitude is coded by the probability, p_A, of local P-type receptor firing, whereas phase is coded by the difference in the timing of action potentials, $T_A - T_B$, of T-type receptors located at points A and B on the body surface. The values plotted for p_A are the mean numbers of spikes recorded from a single primary afferent per successive EODs in the beat cycle. Data from 25 beat cycles were averaged. Similarly, the values plotted for $T_A - T_B$ are means from 25 beat cycles. (From Heiligenberg & Partridge, 1981.)

T-receptor afferents. Most importantly, a single action potential of a T-receptor afferent not arriving in sufficient synchrony with those of its neighbours is insufficient to trigger an action potential in the spherical cell. 'Outliers' are thus discarded by this process of phase averaging. This non-linear mechanism of averaging, originally proposed by Maler *et al.* (1981) on the basis of ultrastructural

studies, has meanwhile been confirmed by intracellular recordings from spherical cells in *Eigenmannia* (M. Kawasaki & W. Heiligenberg, unpublished observation). The same phenomenon has been observed in the giant cells of lamina 6 of the torus which receive converging inputs from spherical cells (Carr *et al.* 1986*a*).

Although some T-afferents may respond to an increase in signal amplitude by slightly advancing the timing of their action potential within the EOD cycle, the timing of the action potentials of spherical cells is rather insensitive to modulations of signal amplitude. Spherical cells thus provide phase information which is not only less jittery but also purer than phase information provided by T-receptors.

A particular form of signal filtering is employed in the processing of primary afferent information in the mormyrids. The Knollenorgans have lower thresholds than the Mormyromasts and are, therefore, suitable for the detection of EODs of distant neighbours. In addition, by firing only a single spike in response to an EOD pulse, they only code the occurrence of this event but not its intensity. Afferent information from Knollenorgans is gated by an inhibition generated by a corollary discharge of the animal's electric organ pacemaker system, so that action potentials caused by the animal's own EODs are not relayed to higher-order neurones in the midbrain. Central information provided by Knollenorgans, therefore, only represents the electrical presence of neighbours (for more details see Bell, 1989).

The higher threshold of Mormyromasts makes this type of receptor less sensitive to the EODs of neighbours and, by firing a burst of spikes which increases with the amplitude of the signal, they code local intensity of the animal's own EOD. Moreover, their input to higher-order neurones is facilitated by a corollary discharge of the electric-organ pacemaker system so that the central nervous system is informed preferentially about local intensities of the animal's own signal. The Mormyromast system is thus dedicated to the analysis of electric images coded by alterations of the animal's own EOD field (for more details see Bell, 1989).

Other sensory systems similarly show separate channels which are adapted to code different aspects within their modality, and a further separation of these aspects may be achieved by separate central pathways. Well-known examples are the magno- and parvocellular systems in mammalian vision.

Although the availability of different classes of receptors facilitates separate coding of different stimulus aspects, their presence is not always necessary to achieve such a separation at a central level. The auditory system of the barn owl presents an example. Primary auditory afferents are tuned to individual frequency bands and respond to modulations in signal amplitude by modulating their rate of firing accordingly. Although these afferents are unable to fire an action potential on each cycle of a carrier signal of sufficiently high frequency, they are still able to code its phase by firing their action potentials at a preferred moment within the carrier cycle. Primary afferents send axon collaterals to two nuclei, the nucleus angularis, which processes amplitude information, and the nucleus magnocellularis, which processes phase information. Neurones in the nucleus angularis modulate their rate of firing in accordance with amplitude modulations of the

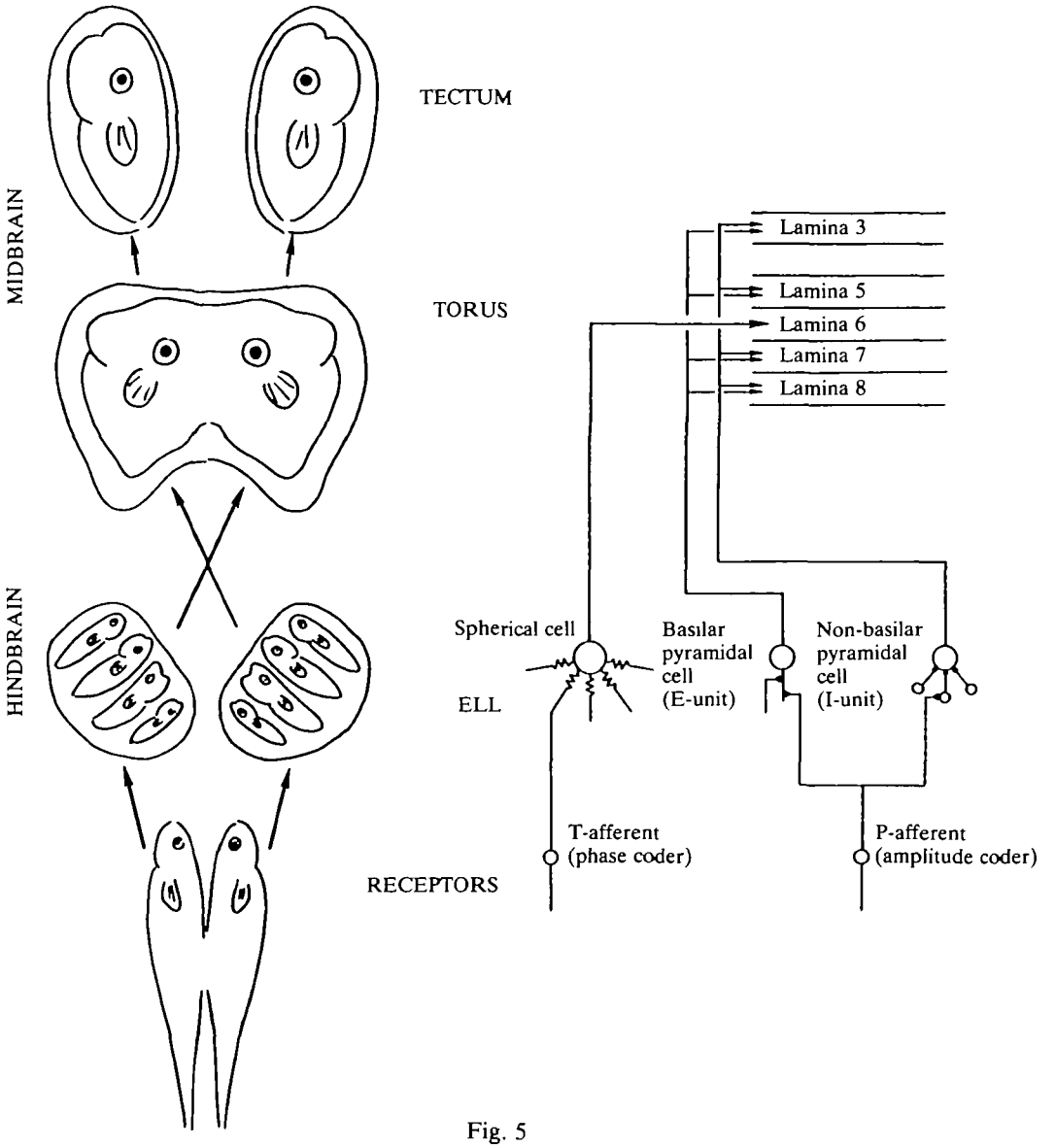

Fig. 5

auditory signal within their frequency band, but the timing of their spikes shows almost no correlation with the phase of the carrier. Neurones in the nucleus magnocellularis, however, fire action potentials which appear to be even more tightly locked to the phase of the carrier than are those of primary afferents, but their rate of firing does not vary with the amplitude of the carrier. Differences in dendritic and synaptic organization within these two nuclei must account for this separation of amplitude information and phase information, which from then on are processed separately up to the level of the midbrain, much as in the case of the electrosensory system of gymnotiform fish (see Takahashi, 1989).

Fig. 5. The somatotopic representation of electrosensory information in the hindbrain and midbrain. Four maps of the body surface are found on each side of the hindbrain in the electrosensory lateral line lobe (ELL). Although the most medial map only receives input from ampullary receptors, the remaining three maps receive identical input through collaterals of primary afferents from tuberous electroreceptors, P-afferents as well T-afferents. The organization of first-order neurones in the tuberous pathway of the ELL is shown on the right. T-afferents from small receptive fields on the body surface converge *via* electrotonic synapses upon spherical cells which, in turn, project in somatotopic order to lamina 6 of the torus semicircularis of the midbrain. P-afferents form excitatory synapses on the basilar dendrites of basilar-pyramidal cells (E-units) and, *via* inhibitory interneurones, also contact non-basilar pyramidal cells (I-units). As a consequence of these connections, E-units are excited by a rise in stimulus amplitude, whereas I-units are excited by a fall. These amplitude-coding cells project in somatotopic order to various laminae of the torus semicircularis above and below lamina 6. Note that the torus as well as the next-order station, the tectum opticum, both contain only a single map of the body surface. (From Heiligenberg, 1988.)

Transformations of information and the coding of derived variables

The firing rate of P-type receptor afferents is determined by the level of the signal amplitude as well as by its temporal changes. Units are strongly excited by a sudden rise in amplitude and then partially adapt as the new amplitude level is maintained. Conversely, a sudden drop in signal amplitude to a new level causes a transient drop in firing rate. Owing to local network properties as well as descending recurrent pathways (Bastian, 1986*a*,*b*; Bastian & Bratton, 1988; Shumway & Maler, 1989), the next higher-order neurones in the ELL differ in their response properties from primary afferents in that they almost exclusively code changes in signal amplitude and largely ignore its level. These neurones of the ELL are thus adapted to detect the motion of objects as well as temporal modulations in interference patterns by monitoring changes in local signal amplitude regardless of its mean level. An even more significant transformation of information is seen in the phase-coding system.

Modulations in phase differences between signals at different sites of the body surface are significant for the control of the JAR as well as for the detection of moving objects. Such phase differences are detected within the somatotopically organized lamina 6 of the torus semicircularis of the midbrain. This lamina receives somatotopically ordered phase information from the spherical cells of the ELL. Specific local connections within this lamina generate a network capable of detecting phase differences between inputs from the area of body surface represented at a given point on this map and inputs from a variety of other areas on the body surface, which serve as phase references (Carr *et al.* 1986*b*). The spherical cells of the ELL as well as their relays, the giant cells in lamina 6, code instantaneous local phase by firing one action potential on each EOD cycle at a fixed latency with reference to the zerocrossing of the signal. The 'small' cells of this lamina, however, compare the timing of spikes arriving from two different sites on the body surface. They fire irregularly, and their probability of firing varies

with the difference in the timing of their two inputs. These small cells, therefore, only code differential phase, and the timing of their spikes is, effectively, no longer related to the individual timing of their inputs. The system discards information about the absolute timing of signals at individual sites on the body surface and only retains the more relevant information about differences in timing. This difference is now coded by the rate of firing of neurones dedicated to the comparison of inputs from two distinct sites on the body surface. A small neurone within the location of lamina 6 representing a specific site, *A*, on the body surface, for example, will raise its rate of firing if the signal in *A* experiences a small phase lead with reference to the signal in some specific area, *B*, and the same neurone will lower its rate of firing if area *A* experiences a phase lag instead. A nearby neurone of this kind also represents area *A*, but it may have a different phase reference area, *C*, on the body surface (Fig. 6).

Similar and, in some cases, more elaborate transformations of information occur at still higher levels of the nervous system in connection with the analysis of complex stimulus patterns. The differential phase information, for example, provided by the small neurones in lamina 6 for a given area on the body surface is combined with amplitude information from the same area in deeper laminae of the torus and tectum.

Central computations and pattern analysis

Amplitude and phase information each have a specific temporal and spatial order which requires a separate analysis. The ordered representation of information in strata of higher-order neurones facilitates such computations.

As was just mentioned, the somatotopically organized lamina 6 of the torus semicircularis of gymnotiform fish is dedicated to the computation of the differential phase between signals at specific sites on the body surface. An auditory structure with a function analogous to that of lamina 6 is the nucleus laminaris in owls. This paired nucleus receives tonotopically ordered phase information from the two ears and is adapted to detect specific interaural phase differences at each carrier frequency (see details in Takahashi, 1989).

Neuroanatomical and ultrastructural studies suggest that a separate and ordered representation of a stimulus variable, such as phase, facilitates local computations of patterns within this variable by means of simple neuronal modules. Such modules form a lattice of identical computational entities spread over the stratum of neurones which constitute the neuronal map of the stimulus variable, and the connection of these modules appears to follow fairly simple and statistical rules (see Fig. 6). A rather limited set of genetic instructions, therefore, may suffice for their ontogeny.

Modulations in the amplitude and phase of a periodic signal are two aspects which require joint evaluation to identify the nature of the pattern. A specific order of amplitude and phase modulations in the pattern formed by the interference of two EODs, for example, reveals the sign of their frequency

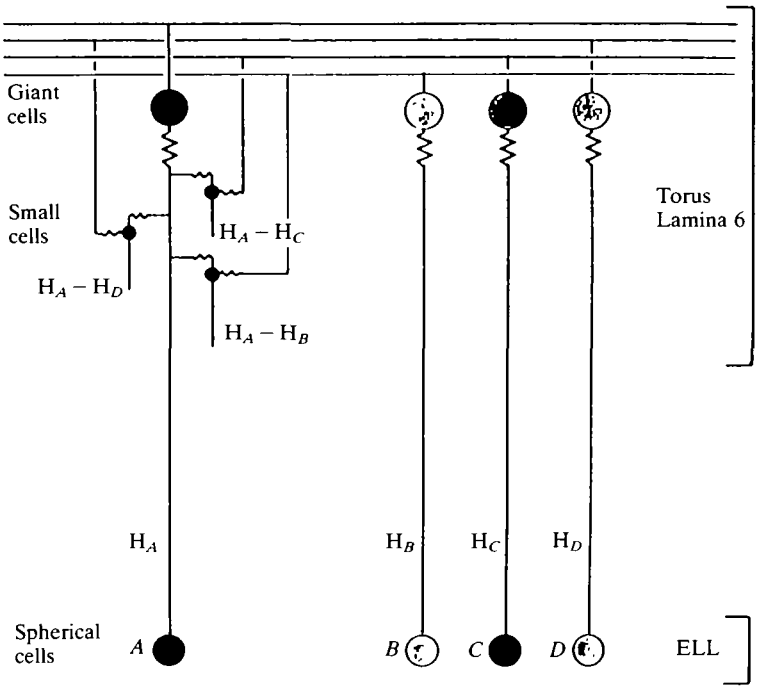

Fig. 6. Lamina 6 of the torus semicircularis contains small cells which code differential phase between signals arriving from different points, *A*,*B*,*C*,*D*, on the body surface. Spherical cells of the ELL (see Fig. 5), coding signal phase, $H_A, \ldots, H_D$, in their respective receptive fields, project in somatotopic order to the giant cells of lamina 6 as well as to the dendrites of small cells in their vicinity. (Although several spherical cells may converge on a single giant cell, only single-cell connections have been drawn here for simplicity.) Giant cells, in turn, send axonal collaterals across wide areas of lamina 6 and contact the somata of small cells. The size of their synapses appears to preclude that more than one giant cell can contact any given small cell. Small cells in the location of lamina 6 representing point *A* on the body surface modulate their rate of firing in accordance with the small temporal disparities, $H_A - H_X$, between action potentials arriving from area *A* at their dendrites and from specific reference areas, *B*,*C*,*D*, on their soma. (From Heiligenberg, 1987, and based upon data from Carr *et al.* 1986*b*.)

difference and allows the fish to shift its own frequency in the appropriate direction. If the neighbour's EOD frequency is lower than the animal's own, for example, large areas of the body surface will predominantly experience rises in local stimulus amplitude paired with phase leads and falls in local stimulus amplitude paired with phase lags. Higher-order neurones in the deeper laminae of the torus and tectum recognize one or the other of these combinations by apparently gating amplitude inputs by phase inputs (Heiligenberg & Rose, 1986). It is essential for this form of evaluation that amplitude and phase modulations be compared in spatial register, and this ordered comparison is facilitated by the laminar organization of the torus semicircularis of the midbrain. While lamina 6 processes phase information, laminae 5 and 7 receive somatotopically ordered

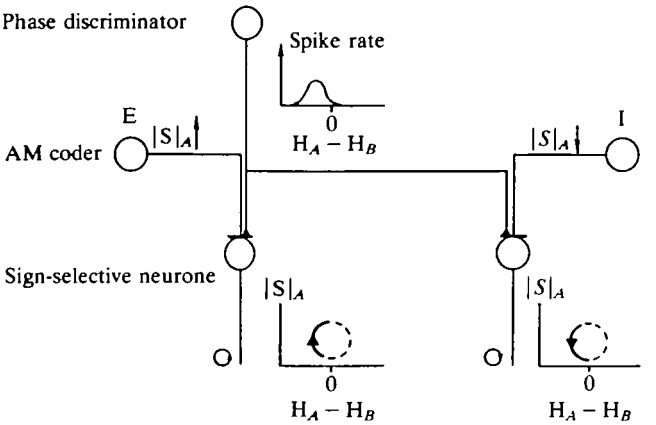

Fig. 7. The gating of amplitude information by phase information. Sign-selective neurones of the midbrain respond to particular combinations of changes in local amplitude, $|S|_A$, in a given area A on the body surface and values of differential phase, $H_A - H_B$, between this area and some reference area, B. Sign-selective neurones, therefore, can discriminate the sense of rotation of graphs in the amplitude–phase plane. The unit on the left is excited by a clockwise rotation centred at zero, whereas the unit on the right is excited by a counterclockwise rotation. The AM coders represent higher-order E- and I-type neurones which are excited by a rise and fall, respectively, in local signal amplitude. Phase discriminators occur first in the form of small cells in lamina 6 of the torus (see Fig. 6). Higher-order phase discriminators are found in deeper laminae of the torus and in the tectum. The synaptic organization shown here is inferred from responses of sign-selective neurones to independent manipulations of amplitude and phase inputs. (From Heiligenberg & Rose, 1986.)

amplitude information. Since all laminae are stacked parallel to each other as well as in somatotopic register, local perpendicular connections between laminae provide connections necessary for the joint computation of local amplitude and phase information. As a consequence of this ordered arrangement, very simple rules for interlaminar connections should suffice to provide the necessary ordered inputs of amplitude and phase information for higher-order neurones (Heiligenberg, 1987) (Fig. 7).

The emergence of 'recognition' neurones

A comparison of filter properties across neurones at different hierarchical levels reveals that units closer to the motor control of a given behaviour respond more selectively to the stimulus pattern eliciting this behaviour and are more insensitive to irrelevant stimulus features. The JAR of *Eigenmannia*, for example, depends upon the sign of the frequency difference, Df, between a neighbour's EOD and the animal's own EOD, and absolute frequency differences of between 2 and 8 Hz are most effective. The orientation of the neighbour's EOD field, however, is of marginal significance in that it may only affect the strength of the response. This

behaviourally defined selectivity for a stimulus pattern gradually emerges at the neuronal level through several levels of integration of sensory information.

Eigenmannia discriminates the sign of Df by simultaneous evaluation of modulations in local signal amplitude and differential phase. Accordingly, the lowest-order neurones sensitive to the sign of Df are found in the torus semicircularis, where the amplitude- and phase-coding pathways converge. Since individual 'sign-selective' neurones of the torus, however, receive information only from limited receptive fields on the body surface, their responses depend significantly upon the orientation of the interfering EOD field, and a change in the orientation may even reverse a neurone's sign preference (Rose & Heiligenberg, 1986*a*). The activity of a single neurone, therefore, does not reflect the sign of Df unambiguously. One can show, however, that the pooled activity of a large population of such neurones, with receptive fields distributed over a wide area of the body surface, should always yield reliable information about the sign of Df (Heiligenberg & Rose, 1986). The population of sign-selective cells in the torus can indeed be compared with a parliament in which members cast conflicting votes, and a behavioural decision reflects the opinion of the majority. One can even show that a minority of members, due to deficiencies in the transfer of phase information, always casts the 'wrong' vote (Heiligenberg, 1987). The sign-selective neurones of the torus differ widely with regard to the magnitude of Df at which they respond best, although the majority prefers magnitudes of Df in the behaviourally optimal range between 2 and 8 Hz.

The nucleus electrosensorius complex of the diencephalon receives direct and, *via* the tectum opticum, indirect input from the torus. Sign-selective cells at this level appear to obtain converging information from larger populations of sign-selective cells of the torus and tectum and, as a likely consequence, discriminate the sign of Df more reliably. Although their degree of sign discrimination may still depend upon the orientation of the interfering EOD field, their sign preference never reverses (Keller, 1988). Two additional features result from the assumed convergence of sensory information from torus to nucleus electrosensorius. Neurones in the latter structure are more sensitive to weak interfering EOD fields, some of them almost reaching behavioural threshold, and the rate of their firing is less strongly locked to the temporal modulation pattern of amplitude and phase generated by the interfering EODs. The neurones of the nucleus electrosensorius, however, do not yet fully reflect the dynamic properties of the JAR as at least some of them prefer magnitudes of Df outside the behaviourally optimal range 2–8 Hz. Moreover, a neurone responding most vigorously to positive Dfs in the range 2–8 Hz may not be inhibited evenly across all values of negative Dfs. It may actually be more active for negative Dfs between −2 and −8 Hz than for positive Dfs outside the range 2–8 Hz. The firing rate of such a neurone, therefore, still does not reveal the sign of Df unambiguously for all magnitudes of Df (Keller, 1988).

These minor differences between behavioural and neuronal response properties vanish at a still higher level of integration, in the diencephalic prepacemaker

nucleus which innervates the final motor command structure, the electric-organ pacemaker nucleus in the medulla of the hindbrain (Kawasaki *et al.* 1988*a*). Small neurones of the prepacemaker raise their rate of firing in response to negative Dfs (i.e. when the neighbour's EOD frequency is lower), and the animal raises its own EOD frequency so that a larger separation of the interfering frequencies is achieved. The same neurones lower their rate of firing in response to positive Dfs which cause a lowering of the animal's EOD frequency. The firing rate of any single neurone thus unambiguously reflects the sign of Df, and the strength of the neuronal response is directly related to the strength of the behavioural response. These sign-selective neurones are rather homogeneous in their response characteristics, which closely resemble the behavioural response. In particular, they show practically the same dependence upon the magnitude of Df as does the JAR, many of them are as sensitive to weak interfering fields as is the behavioural response of the intact animal, and the response of many neurones varies as little with the orientation of the interfering EOD field as does the intact behaviour. Finally, the firing rate of these neurones is no longer modulated at the difference frequency, Df, with the exception of those very small magnitudes of Df which also cause corresponding weak modulations in the animal's own EOD frequency (Rose *et al.* 1988). The small cells of the prepacemaker nucleus, therefore, code a behavioural effort, namely to change the frequency of the pacemaker, and their activity is no longer affected by aspects of the stimulus regime which are irrelevant to this particular behavioural response.

Although torus and tectum are structured somatotopically, no obvious somatotopic order is found at the next higher level, the nucleus electrosensorius which, instead, reveals a motor map. Whereas stimulation of one portion of this nucleus raises the pacemaker frequency, stimulation of a more ventral and rostral portion lowers the pacemaker frequency. Both structures are essential for the JAR, since their selective, bilateral lesion abolishes the animal's ability either to raise or to lower its frequency, respectively (Keller & Heiligenberg, 1989).

Multiple representations and sharing of information

The primary afferents from tuberous electroreceptors send collaterals to three somatotopically ordered maps in the ELL which, at first glance, show very similar anatomical and physiological properties. A recent analysis by Shumway (1989*a*,*b*), however, has revealed significant functional differences between these three maps. Owing to larger spatial convergence, pyramidal cells in the most lateral of the three maps have larger receptive fields and are more sensitive to small modulations in signal amplitude than pyramidal cells in the central-medial map. At the same time, the pyramidal cells of the lateral map respond more rapidly to amplitude modulations and thus provide better temporal resolution than the pyramidal cells of the central-medial map. Neurones of the central-lateral map, which lies between the lateral map and the central-medial map, show degrees of spatial and temporal resolution intermediate to those of their neighbours. The

availability of multiple maps receiving identical information thus offers the opportunity for processing this information under different aspects in separate, specialized networks. It appears plausible that additional maps originated as 'accidental' reduplications of existing maps and were then progressively adapted for specific tasks in sensory processing. An evolutionary scenario of this kind was proposed by Allman *et al.* (1981) for multiple visual representations in mammals.

Multiple presentations are found at all levels of the nervous system, from sensory processing to motor control. Neurones which respond very selectively to a specific stimulus pattern and appear to be dedicated to the control of a particular kind of behaviour emerge rather late within the neuronal hierarchy. Lower-order neurones, even at a level as high as the tectum opticum, still have rather general response characteristics. Electrosensory neurones of the tectum of gymnotiform fish respond to certain combinations of phase and amplitude modulations which may be generated by moving objects as well as by interfering EODs of neighbours (Rose & Heiligenberg, 1986*a*; Heiligenberg & Rose, 1987). The firing of such a neurone, therefore, tells us little about the world outside, unless we monitor the activity of this neurone for a period much longer than the behavioural response latency of the animal. Simultaneous recordings from many such neurones and parallel evaluation of the spatial and temporal order of their activity, however, would allow us to discriminate between moving objects and interfering EODs almost immediately. These tectal neurones send axonal collaterals to various targets in the diencephalon, midbrain and hindbrain so that their information can be processed by different algorithms in separate higher-order structures. One of these structures, the nucleus electrosensorius, receives additional inputs from the torus semicircularis and participates in the control of the JAR (Keller & Heiligenberg, 1989). Other structures in the reticular formation are apparently adapted to monitor the motion of objects and to control movements of the body. Various behavioural systems thus share rather general spatial and temporal information provided by the tectum and are able to extract specific patterns for their own control.

Neuronal convergence enhances the sensitivity of higher-order sensory neurones

The enhancement of sensitivity with convergence is illustrated by the accuracy with which phase is coded during the JAR. The depth of phase and amplitude modulations caused by the interference of a neighbour's EOD with the animal's own EOD decreases monotonically with the relative amplitude of the interfering EOD. The strength of the JAR, therefore, decreases as the distance to the neighbour increases. Studies of the JAR of *Eigenmannia* have shown that these animals can resolve extremely small modulations in the differential timing of signals at different sites on their body surface. As long as a sufficiently large area of the body is exposed to the interference pattern generated by the animal's own EOD and the neighbour's EOD, the fish can detect phase differences smaller than 0·5 μs. Larger phase differences are required to drive the JAR if the interference

pattern is restricted to smaller regions of the body and thus to a smaller set of electroreceptors (Rose & Heiligenberg, 1985). This extreme temporal resolution is surprising in view of the considerable jitter observed in the phase-coding system.

As was mentioned previously, T-type afferents record the timing of the zerocrossing of a signal by firing an action potential at a specific latency, with a standard deviation of approximately 30 μs. Through convergence at the level of the ELL and within lamina 6 of the torus, this jitter is reduced by a factor of approximately three at the level of lamina 6 (Carr *et al.* 1986*a*). Higher-order units of the torus can resolve differential phase values as small as 10 μs, and averaging of their activity over periods much longer than the latency of the JAR reveals thresholds for their phase discrimination close to that measured behaviourally (Rose & Heiligenberg, 1986*b*). Converging inputs from large numbers of such neurones at the level of the nucleus electrosensorius and further convergence from this nucleus to the prepacemaker nucleus should, therefore, yield single neurones with a temporal resolution close to that of the intact behaviour. Neurones of such sensitivity are indeed found in the prepacemaker nucleus, and, much as is true for the intact behaviour, they require sensory inputs from sufficiently large areas of the body surface to achieve this high sensitivity (Kawasaki *et al.* 1988*b*).

Enhanced stimulus resolution in ordered maps of broadly tuned receivers

Biologically relevant stimulus variables, such as the location of a stimulus source in space, the frequency of a tone or the time delay of an echo, are commonly coded by broadly tuned neurones which form ordered neuronal maps. As one moves along an axis of a map, neurones tuned to progressively higher values of the stimulus variable are encountered in one particular direction. As a consequence of this order, a given value of this variable is coded by the location of the centre of a smooth distribution of excitation within the stratum of neurones. One can demonstrate theoretically that a form of weighted averaging of inputs provided by these neurones to higher-order elements can yield a degree of stimulus discrimination which far surpasses that of individual neurones in the map (Heiligenberg, 1987; Baldi & Heiligenberg, 1988). Although no clear example of this mechanism can yet be demonstrated in the electrosensory system, its functional and developmental simplicity suggest that nature has long made use of it somewhere. Mittelstaedt & Eggert (1988) proposed such a mechanism of 'map weighting' for the transformation of spatially ordered information into oriented motor commands. J. P. Miller (personal communication) suggests that a set of broadly tuned wind detectors on the cerci of crickets may yield more accurate spatial resolution at a higher level by virtue of such weighted averaging.

The analysis and simulation of neural networks

Intracellular labelling of physiologically identified neurones is a common tool for relating functional and morphological properties of neurones. To verify

specific types of synaptic connections and, thereby, to establish the rules for connections within networks, rather time-consuming ultrastructural studies of labelled neurones are necessary (Carr *et al.* 1986*b*; Mathieson *et al.* 1987). In some instances, *in vivo* experiments can be complemented by *in vitro* experiments on structures isolated in a slice chamber. This approach, allowing for better control of ionic conditions and the presence of agonists or antagonists of certain transmitters, has been very fruitful in the study of the ELL (Mathieson & Maler, 1988) and the medullary pacemaker (Dye, 1988) by revealing the functional significance of certain transmitters. These findings could then be tested *in vivo* by applying specific agonists or antagonists to particular locations within these structures (Shumway & Maler, 1989; Dye *et al.* 1988). The structural and functional organization of the ELL has now been identified in great detail, and the response properties of its neurones can, at least qualitatively, be explained on the basis of their specific connections and the action of known transmitters. A quantitative theory of the operation of the ELL, however, will not only require more detailed studies of its dynamic properties but also network simulations, preferably performed on large computers structured in parallel.

Developmental and evolutionary considerations

Studies of neuronal systems always invite questions and speculations about their developmental and evolutionary history. Neuronal computations postulated on the basis of behavioural and physiological experiments appear plausible to the extent that they can be implemented by simple and robust network structures, and the development and self-organization of these structures should require a rather limited amount of genetic information. The formulation of realistic theories of brain function very much depends upon a thorough knowledge of developmental constraints.

The analysis of brain mechanisms commonly reveals designs that human engineers would not have chosen. Brains appear to be built rather sloppily and are full of imperfections and patchwork which has accumulated in the course of their evolution (Heiligenberg, 1987, 1988). That they are still able to function with such perfection and that they are so tolerant of perturbations and trauma is all the more remarkable.

I thank M. Konishi, M. Kawasaki, C. Keller and C. E. Carr for most helpful comments on this manuscript. This work is supported by grants from NIMH, NINCDS and NSF.

References

ALLMAN, J. M., BAKER, J. F., NEWSOME, W. T. & PETERSEN, S. E. (1981). Visual topography and function. In *Cortical Sensory Origination*, vol. 2 (ed. C. N. Woolsey), pp. 171–185. Clifton, New Jersey: Humana Press.

BALDI, P. & HEILIGENBERG, W. (1988). How sensory maps could enhance resolution through ordered arrangements of broadly tuned receivers. *Biol. Cybernetics* **59**, 313–318.

BASTIAN, J. (1986*a*). Electrolocation: behavior, anatomy, and physiology. In *Electroreception* (ed. T. H. Bullock & W. Heiligenberg), pp. 577–612. New York: Wiley & Sons.

BASTIAN, J. (1986*b*). Gain control in the electrosensory system: a role for the descending projections to the electrosensory lateral line lobe. *J. comp. Physiol.* A **158**, 505–515.

BASTIAN, J. & BRATTON, B. O. (1988). The nucleus praeeminentialis: Properties of neurons providing descending inputs to the electrosensory lateral line lobe of weakly electric fish. *Neurosc. Abstr.* **128.9**, 18th Annual Meeting, Toronto.

BELL, C. C. (1989). Sensory coding and corollary discharge effects in momyrid electric fish. *J. exp. Biol.* **146**, 229–253.

BULLOCK, T. H. & HEILIGENBERG, W. (1986). *Electroreception*. New York: Wiley & Sons.

CARR, C. E., HEILIGENBERG, W. & ROSE, G. J. (1986*a*). A time-comparison circuit in the electric fish midbrain. I. Behavior and Physiology. *J. Neuroscience* **6**, 107–119.

CARR, C. E. & MALER, L. (1986). Electroreception in gymnotiform fish: Central anatomy and physiology. In *Electroreception* (ed. T. H. Bullock & W. Heiligenberg), pp. 319–373. New York: Wiley & Sons.

CARR, C. E., MALER, L. & TAYLOR, B. (1986*b*). A time-comparison circuit in the electric fish midbrain. II. Functional morphology. *J. Neuroscience* **6**, 1372–1383.

DYE, J. (1988). An *in vitro* physiological preparation of a vertebrate communicatory behavior: chirping in the weakly electric fish, *Apteronotus*. *J. comp. Physiol.* A **163**, 445–458.

DYE, J., HEILIGENBERG, W., KELLER, C. & KAWASAKI, M. (1988). Different glutamate receptors mediate distinct behaviors in a single brainstem nucleus in weakly electric fish. *Neurosci. Abstr.* **86.8**, 18th Annual Meeting, Toronto.

HEILIGENBERG, W. (1986). Jamming Avoidance Responses: Model systems for neuroethology. In *Electroreception* (ed. T. H. Bullock & W. Heiligenberg), pp. 613–650. New York: Wiley & Sons.

HEILIGENBERG, W. (1987). Central processing of sensory information in electric fish. *J. comp. Physiol.* A **161**, 621–631.

HEILIGENBERG, W. (1988). Neural mechanisms of perception and motor control in a weakly electric fish. In *Advances in the Study of Behavior*, vol. 18 (ed. J. S. Rosenblatt, C. Beer, M. C. Busnel & P. J. B. Slater), pp. 73–98. San Diego: Academic Press.

HEILIGENBERG, W. & PARTRIDGE, B. L. (1981). How electroreceptors encode JAR-eliciting stimulus regimes: Reading trajectories in a phase–amplitude plane. *J. comp. Physiol.* **142**, 295–308.

HEILIGENBERG, W. & ROSE, G. J. (1986). Gating of sensory information: Joint computations of phase and amplitude data in the midbrain of the electric fish *Eigenmannia*. *J. comp. Physiol.* A **159**, 311–324.

HEILIGENBERG, W. & ROSE, G. J. (1987). The optic tectum of the gymnotiform electric fish, *Eigenmannia*: Labeling of physiologically identified cells. *Neuroscience* **22**, 331–340.

HOPKINS, C. D. (1986). Behavior of Mormyridae. In *Electroreception* (ed. T. H. Bullock & W. Heiligenberg), pp. 527–576. New York: Wiley & Sons.

KALMIJN, A. (1987). Detection of weak elecric fields. In *Sensory Biology of Aquatic Animals* (ed. J. Atema, R. R. Fay, A. N. Popper & W. N. Tavolga), pp. 151–186. New York: Springer Verlag.

KAWASAKI, M., MALER, L., ROSE, G. J. & HEILIGENBERG, W. (1988*a*). Anatomical and functional organization of the prepacemaker nucleus in gymnotiform electric fish: The accommodation of two behaviors in one nucleus. *J. comp. Neurol.* **276**, 113–131.

KAWASAKI, M., ROSE, G. J. & HEILIGENBERG, W. (1988*b*). Temporal hyperacuity in single neurons of electric fish. *Nature, Lond.* **336**, 173–176.

KELLER, C. (1988). Stimulus discrimination in the diencephalon of *Eigenmannia*: the emergence and sharpening of a sensory filter. *J. comp. Physiol.* A **162**, 747–757.

KELLER, C. & HEILIGENBERG, W. (1989). From distributed sensory processing to discrete motor representations in the diencephalon of the electric fish, *Eigenmannia*. *J. comp. Physiol.* A **164**, 565–576.

KONISHI, M., TAKAHASHI, T. T., WAGNER, H., SULLIVAN, W. E. & CARR, C. E. (1988). Neurophysiological and anatomical substrates of sound localization in the owl. In *Auditory Function* (ed. G. M. Edelman, W. E. Gall & W. M. Cowan), pp. 721–745. New York: John Wiley & Sons.

MALER, L., SAS, E. & RODGERS, J. (1981). The cytology of the posterior lateral line lobe of high-frequency weakly electric fish (Gymnotidae): Dendritic differentiation and synaptic specificity in a simple cortex. *J. comp. Neurol.* **195**, 87–140.

MATHIESON, W. B., HEILIGENBERG, W. & MALER, L. (1987). Ultrastructural studies of physiologically identified electrosensory afferent synapses in the gymnotiform fish, *Eigenmannia*. *J. comp. Neurol.* **255**, 526–537.

MATHIESON, W. B. & MALER, L. (1988). Morphological and electrophysiological properties of a novel *in vitro* preparation: the electrosensory lateral line lobe brain slice. *J. comp. Physiol.* A **163**, 489–506.

MITTELSTAEDT, H. & EGGERT, T. (1988). How to transform topographically ordered spatial information into motor commands? In *Visuomotor Coordination: Amphibians, Comparisons, Models and Robots* (ed. M. A. Arbib & J. P. Ewert), pp. 569–585. New York: Plenum Press.

ROSE, G. J. & HEILIGENBERG, W. (1985). Temporal hyperacuity in the electric sense of fish. *Nature, Lond.* **318**, 178–180.

ROSE, G. J. & HEILIGENBERG, W. (1986*a*). Neural coding of difference frequencies in the midbrain of the electric fish *Eigenmannia*: reading the sense of rotation in an amplitude-phase plane. *J. comp. Physiol.* A **158**, 613–624.

ROSE, G. J. & HEILIGENBERG, W. (1986*b*). Limits of phase and amplitude sensitivity in the torus semicircularis of *Eigenmannia*. *J. comp. Physiol.* A **159**, 813–822.

ROSE, G. J., KAWASAKI, M. & HEILIGENBERG, W. (1988). 'Recognition units' at the top of a neuronal hierarchy? *J. comp. Physiol.* A **162**, 759–772.

SHUMWAY, C. A. (1989*a*). Multiple electrosensory maps in the medulla of weakly electric gymnotiform fish. I. Physiological differences. *J. Neuroscience* (in press).

SHUMWAY, C. A. (1989*b*). Multiple electrosensory maps in the medulla of weakly electric gymnotiform fish. II. Anatomical differences. *J. Neuroscience* (in press).

SHUMWAY, C. A. & MALER, L. (1989). GABAergic inhibition shapes temporal and spatial response properties of pyramidal cells in the electrosensory lateral line lobe of gymnotoid fish. *J. comp. Physiol.* A **164**, 391–407.

TAKAHASHI, T. (1989). The neural coding of auditory space. *J. exp. Biol.* **146**, 307–322.